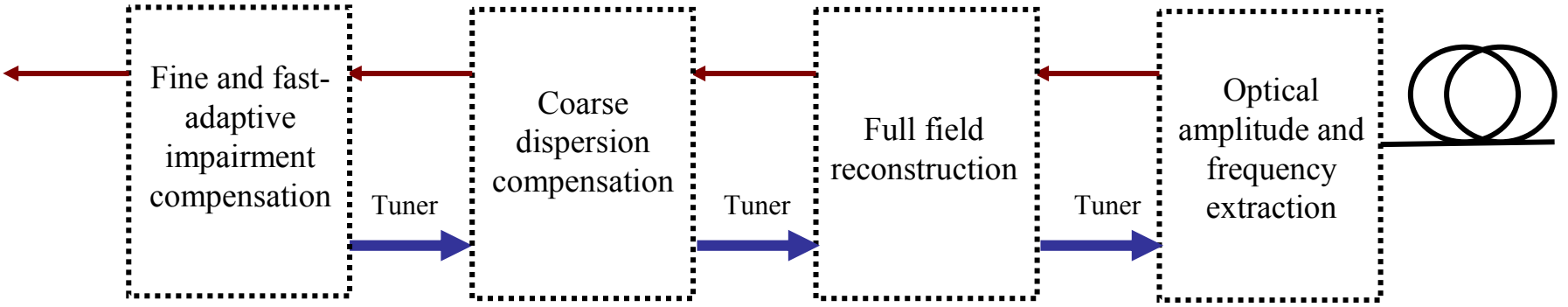
Fine and fast-adaptive impairment compensation
Tuner
Coarse dispersion compensation
Tuner
Full field reconstruction
Tuner
Optical amplitude and frequency extraction

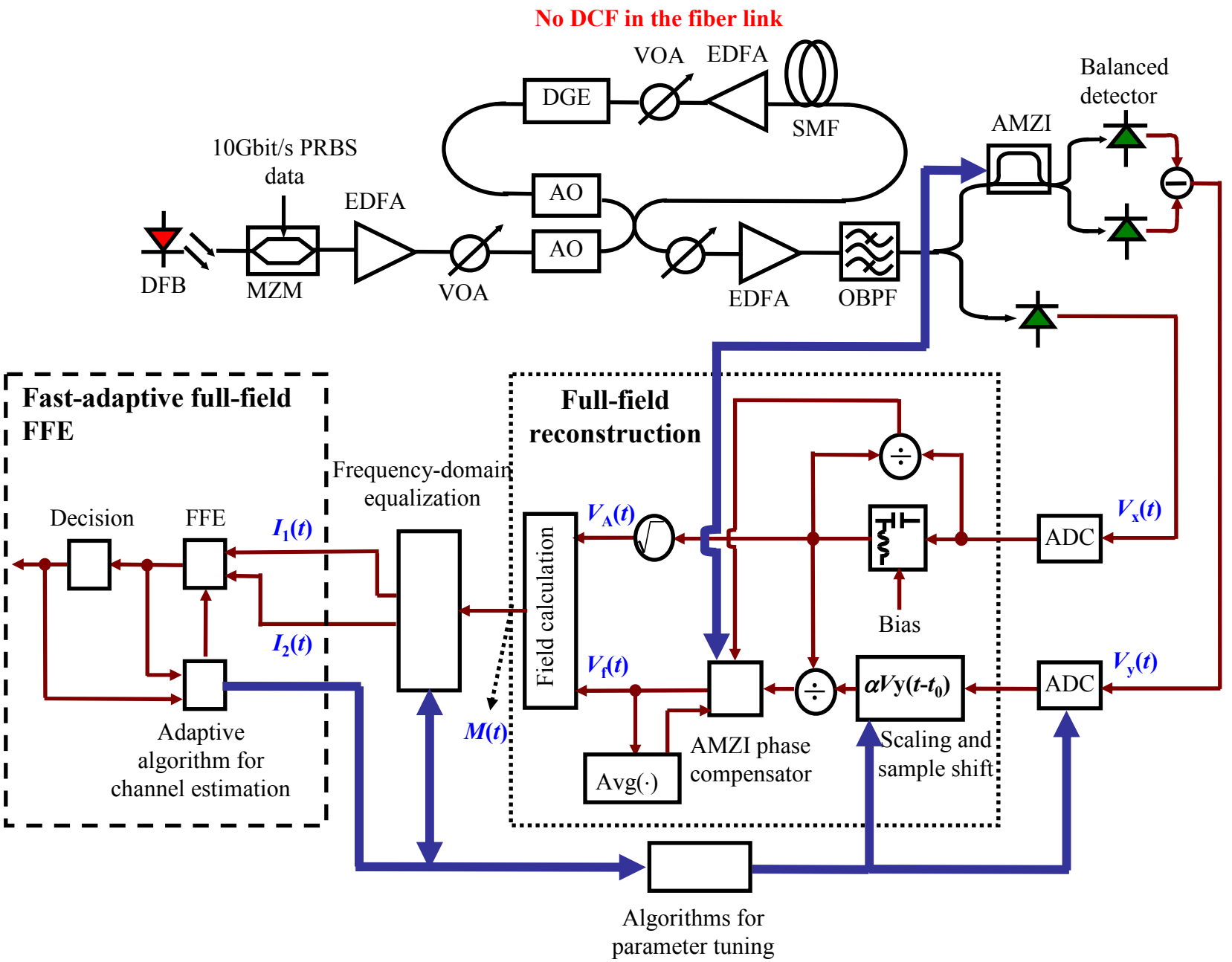
No DCF in the fiber link
VOA
EDFA
DGE
SMF
Balanced detector
AMZI
10Gbit/s PRBS data
EDFA
AO
AO
DFB
MZM
VOA
EDFA
OBPF
Fast-adaptive full-field FFE
Full-field reconstruction
Frequency-domain equalization
Decision
FFE
$I_1(t)$
$I_2(t)$
$V_A(t)$
$V_x(t)$
ADC
Field calculation
Bias
$V_f(t)$
$\alpha V y(t-t_0)$
ADC
$V_y(t)$
$M(t)$
Avg(·)
AMZI phase compensator
Scaling and sample shift
Adaptive algorithm for channel estimation
Algorithms for parameter tuning